Ⓒ 2008 Makoto Tsuruta / CRANE Home Page
http://www.crane.gr.jp
info@crane.gr.jp
Drawn by Makoto Tsurta TOKYO JAPAN
Plan No. A009

Jose Ramirez I
Guitar 1909

String length : L = 613mm
17 frets " T " type : Brass
Weight 833g (include peg & strings)
Neck : Pine
Top : Maybe pine / thickness 2.5mm
Body side : Cypress / thickness 1.5mm
Body back : Cypress / thickness 1.8mm

♥ この図面の配布にあたって、許諾いただいたアマリア・ラミレス(Amalia Ramirez)女史、
そして図面作成にあたって協力頂いた製作仲間の乙竹(Hideo Ototake)氏に心より感謝します。

♥ I would like to express my gratitude to Ms. Amalia Ramirez for her kind acceptance of our publication of the plan(drawing) and to my friend luthier, Mr. Hideo Ototake, for his valuable assistance to complete the plan.

この図面について : Notice

この図面は鶴田 誠によって作図された。
個人の研究資料としてのみ使用を許可するものであって
無断での商用利用を堅く禁ずる。
この図面を世界の弦楽器製作者に捧ぐ。

This plan is drawn by Makoto Tsuruta.
It shouldn't be used for commercial purpose.
Business use is prohibited.
I happily offer this plan to the Lutheries of all over the world.

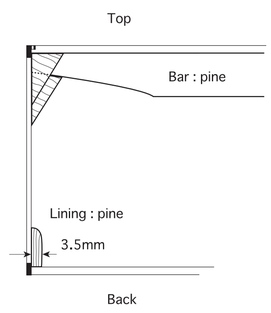

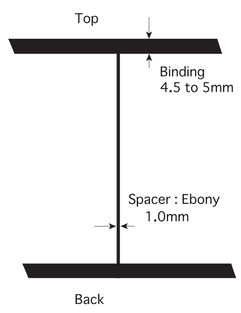

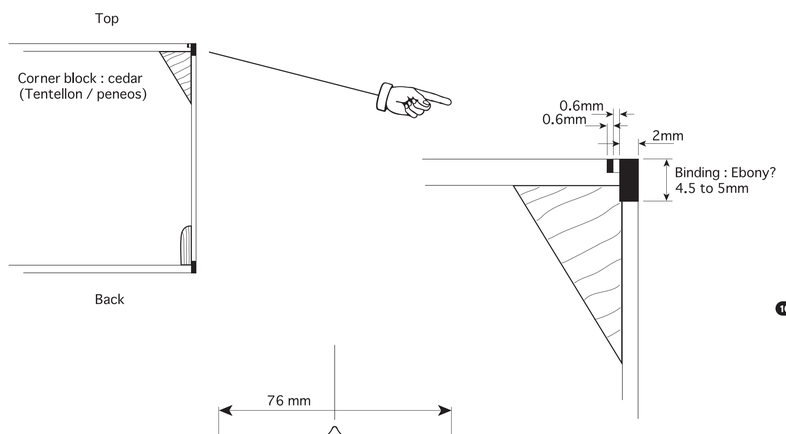

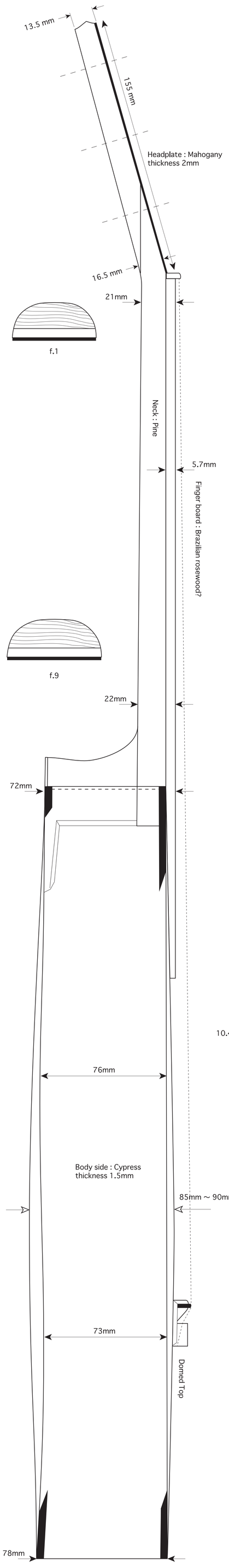

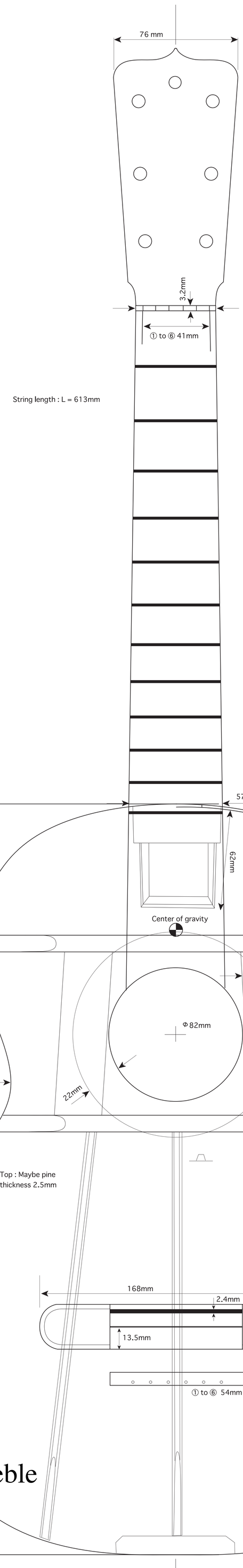

FULL SCALE => 613 mm

Nut to Fret [mm]

1FRET: = 34.4 mm
2FRET: = 66.9 mm
3FRET: = 97.5 mm
4FRET: = 126.5 mm
5FRET: = 153.8 mm
6FRET: = 179.5 mm
7FRET: = 203.9 mm
8FRET: = 226.8 mm
9FRET: = 248.5 mm
10FRET: = 268.9 mm
11FRET: = 288.3 mm
12FRET: = 306.5 mm
13FRET: = 323.7 mm
14FRET: = 339.9 mm
15FRET: = 355.3 mm
16FRET: = 369.7 mm
17FRET: = 383.4 mm

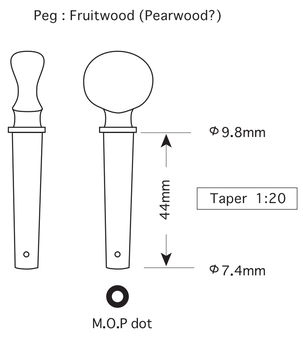

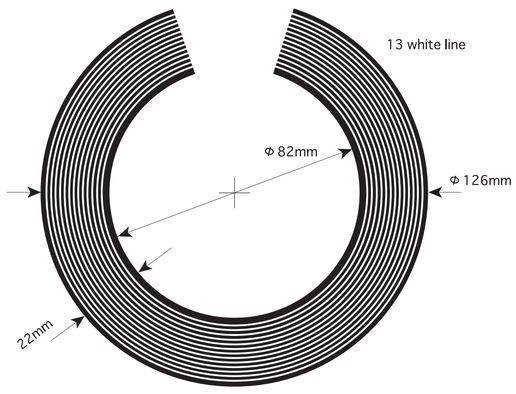

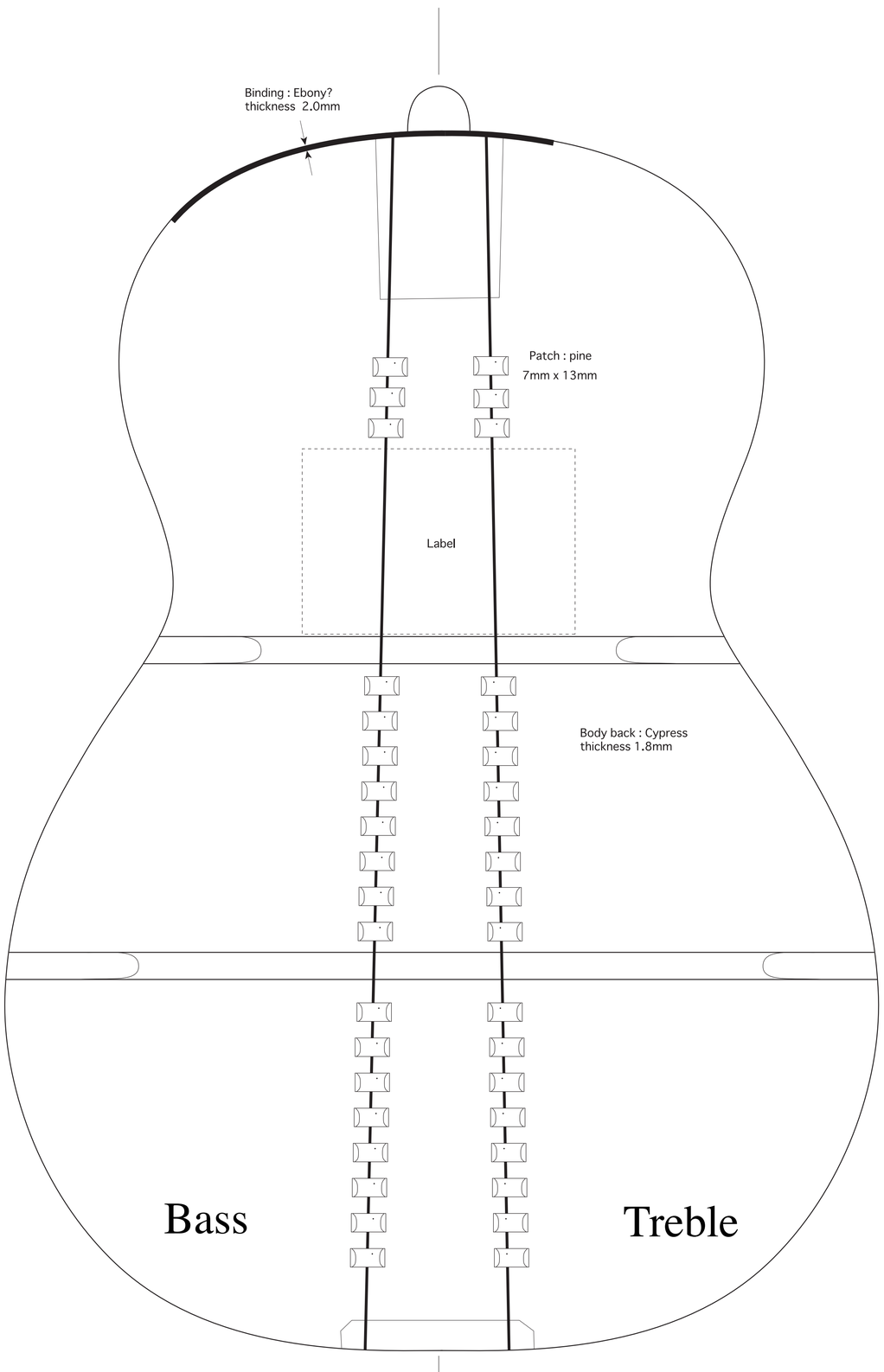

1000mm

800mm